PUBLISHED: 23-JUN-2017
2017.0 DISCOVERY (LR), 308-07

TRANSFER CASE - [+] SINGLE SPEED TRANSFER CASE

TRANSFER CASE - V6 S/C 3.0L PETROL (G1972534)

INSTALLATION

41.20.25	TRANSFER GEARBOX - RENEW	3000 CC, AJ V6 (AJ126), SINGLE SPEED TRANSFER CASE	4.2	USED WITHINS	
41.20.25	TRANSFER GEARBOX - RENEW	3000 CC, AJ V6 (AJ126), TWIN SPEED TRANSFER CASE	4.2	USED WITHINS	

INSTALLATION

SPECIAL TOOL(S)

transmissionmanuals.com



303-1069

Adapter, Wrench



307-520

Installer, Output Shaft Seal



JLR-308-930

Installer, Oil Seal

transmissionmanuals.com

GENERAL EQUIPMENT

EQUIPMENT NAME
Transmission jack

PART(S)

STEP	PART NAME	QUANTITY
Step 2	Transfer case input shaft oil seal	1
Step 9	Driveshaft flange bolts	6

NOTE:

Some variation in the illustrations may occur, but the essential information is always correct.

1.

NOTE:

This step is only required if previously removed.

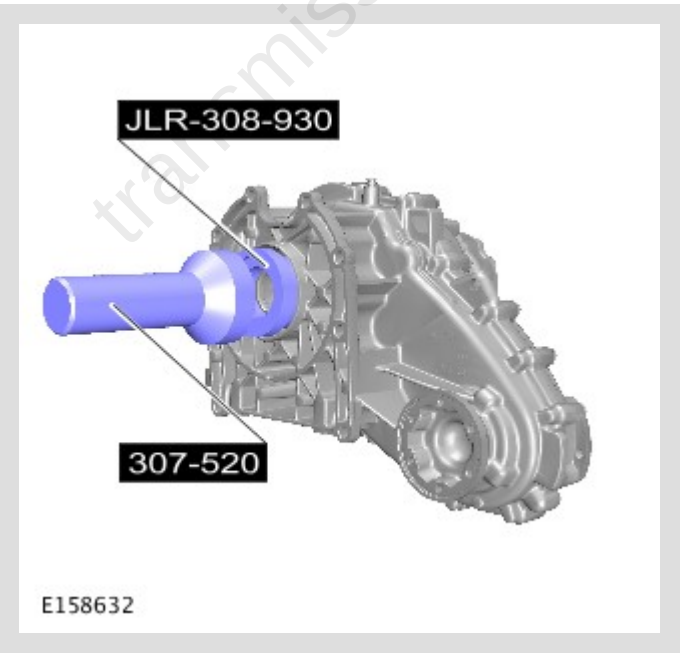

Use the special tool to install the seal.
Special Tool(s): JLR-308-930 , 307-520

transmissionmanuals.com

2.

NOTE:

This step is only required if previously removed.

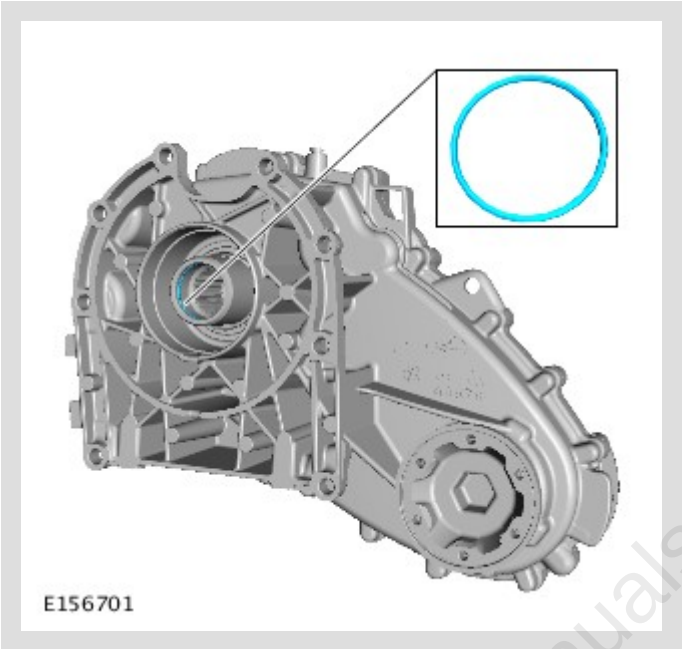

Install a new O-ring seal.

Renew Part: Transfer case input shaft oil seal Quantity: 1 .

transmissionmanuals.com

3.

WARNING:

Secure the component to the transmission jack.

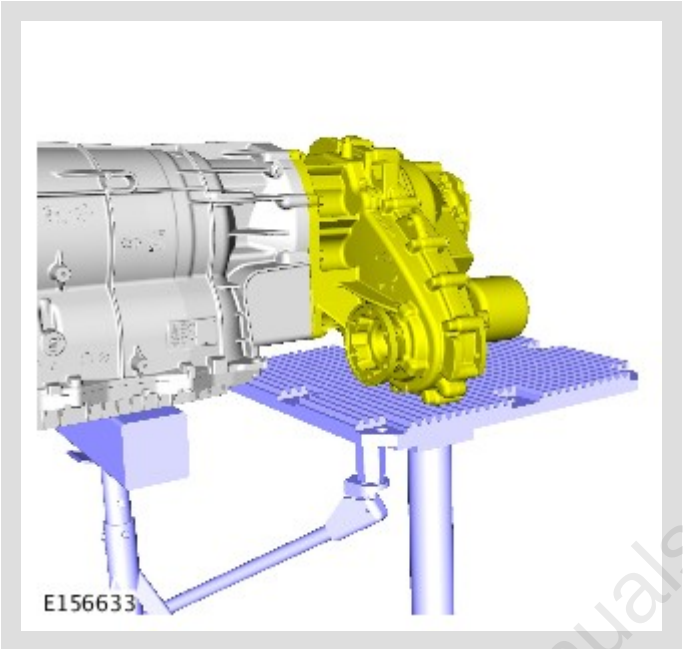

- Clean the component mating faces.
- Lubricate input shaft splines with 'Weicon TL7391' grease.
  General Equipment: Transmission jack

4.

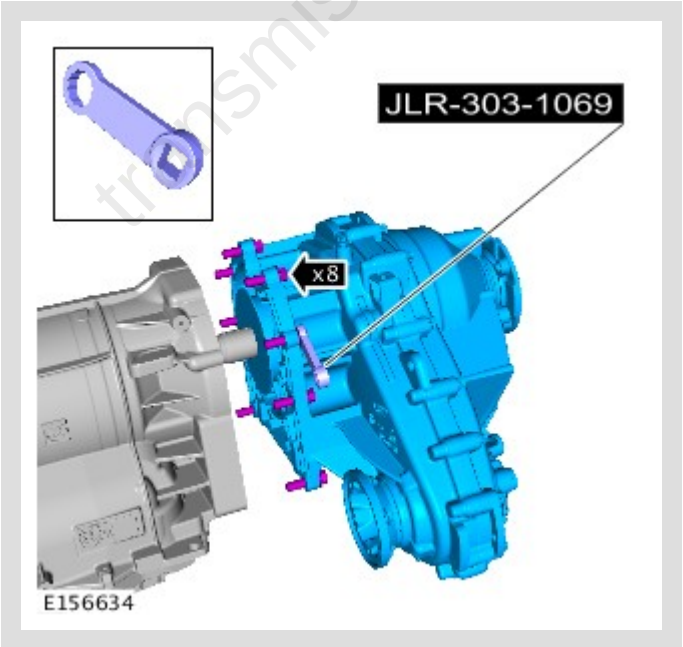

Special Tool(s): 303-1069

Torque: **45 Nm**

transmissionmanuals.com

5.

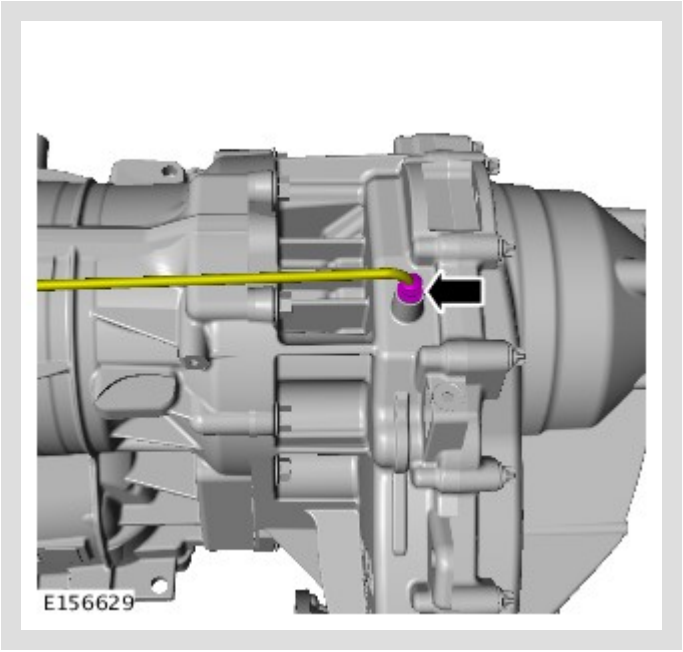

To prevent water ingress and subsequent transmission damage, make sure that the breather is fully pushed onto the transmission casing.

6.

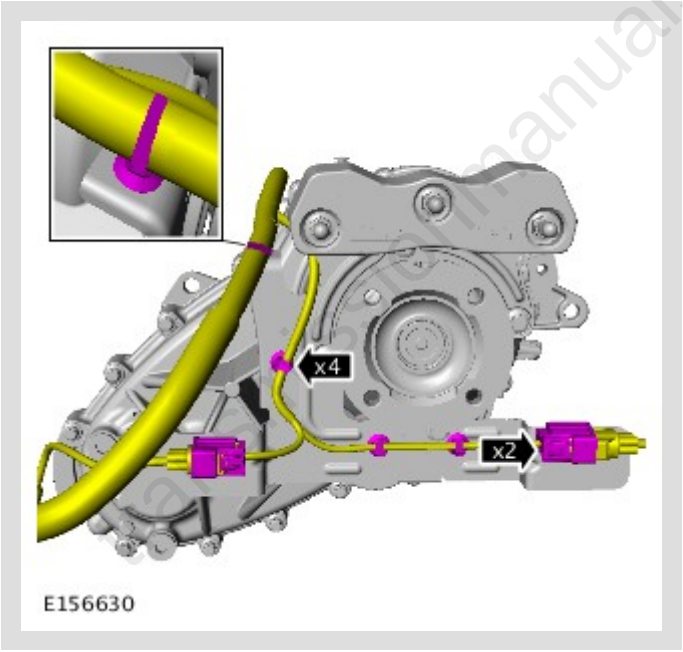

Secure the wiring harness.

7.

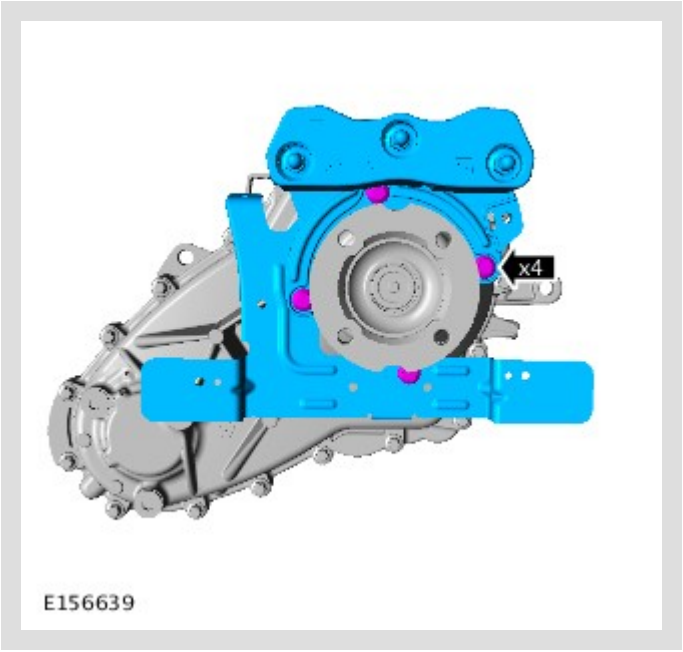

Torque: **25 Nm**

8.

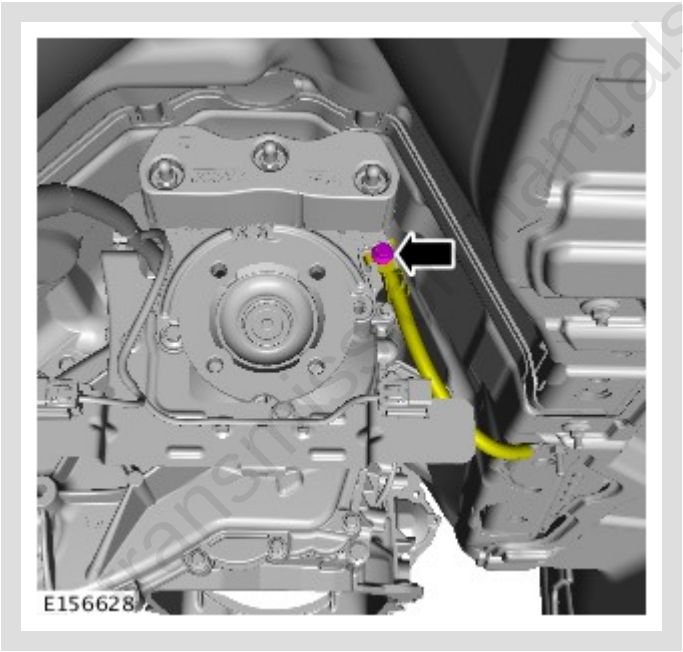

Install the earth strap.

Torque: **25 Nm**

transmissionmanuals.com

9.

CAUTION:

Make sure that new bolts are installed.

NOTE:

Make sure that the component is installed to the position noted on removal.

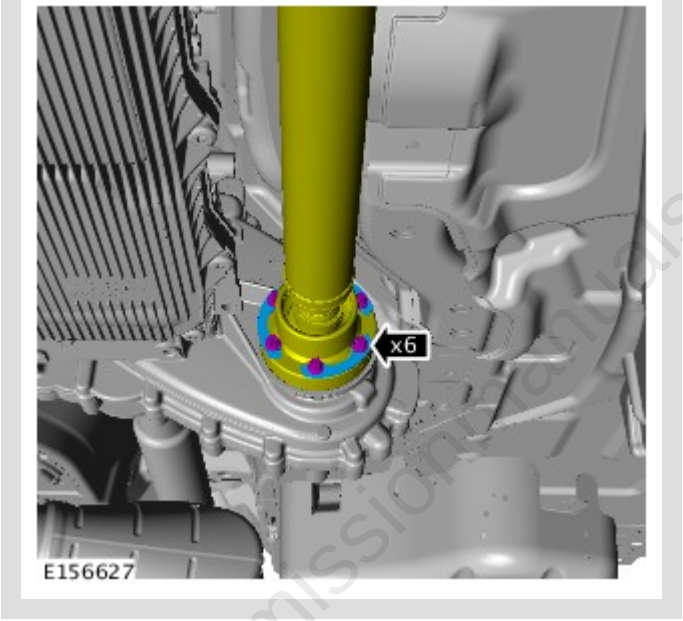

Renew Part: Driveshaft flange bolts Quantity: 6 .

Torque:

Stage 1 **45 Nm**

Stage 2 **90 Nm**

10. Install the rear driveshaft.

Refer to: Rear Driveshaft - V6 S/C 3.0L Petrol (205-01 Driveshaft, Removal and Installation).

transmissionmanuals.com

11.

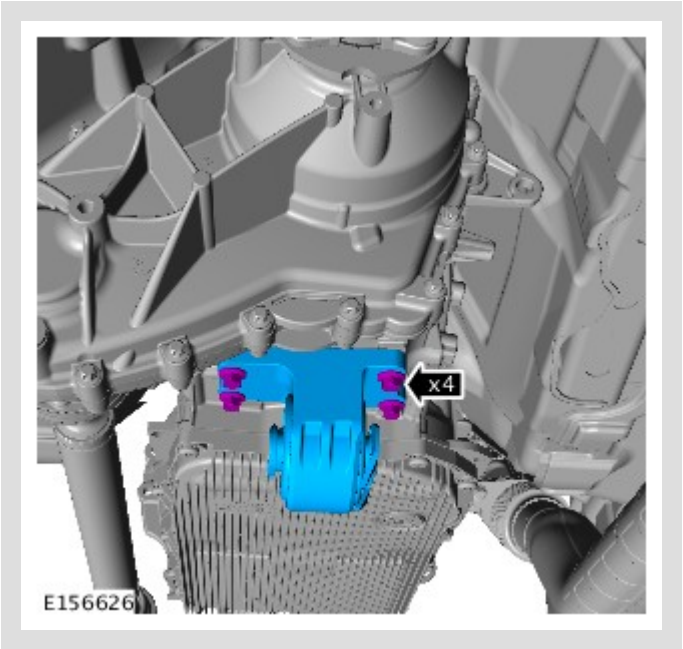

Install the transfer case damper.
Torque: 60 Nm

12. Install the transmission support crossmember.
Refer to: Transmission Support Crossmember - V6 S/C 3.0L Petrol (502-02 Full Frame and Body Mounting, Removal and Installation).

13. Refill the transfer case with the recommended fluid.
Refer to: Transfer Case Draining and Filling (308-07 Transfer Case - [+] Single Speed Transfer Case, General Procedures).

14. Connect the battery ground cable.
Refer to: Specifications (414-00 Battery and Charging System - General Information, Specifications).

transmissionmanuals.com